950V CoolMOS™ P7 powered Infineon 40W Adapter board

Quasi resonant snubberless flyback converter solution for high efficiency adapter designs.

EVAL_40W_FLY_P7_950V

Jared Huntington(IFAT PMM ACDC AE)
Florian Zechner (IFAT PMM ACDC AE)
GD10000720

Table of contents

1 General description

2 Efficiency results

3 PCB layout

4 Evaluation board features

Copyright © Infineon Technologies AG 2018. All rights reserved.

Table of contents

1 General description

2 Efficiency results

3 PCB layout

4 Evaluation board features

Copyright © Infineon Technologies AG 2018. All rights reserved.

General description

Introduction

The Infineon **EVAL_40W_FLY_P7_950V** evaluation board described in this general description provides a test platform for the new Infineon 950 V CoolMOS™ P7 series of high voltage MOSFETs. The adapter uses the ICE2QS03G, a second generation current mode control quasi-resonant flyback controller and an IPA95R450P7S 950 V CoolMOS™ P7 series power MOSFET.

This design is done using a snubberless Flyback in order to improve the overall system efficiency while reducing the cost of the snubber network. This document will also show the overall benefits that the 950 V CoolMOS™ P7 presents for switch mode power supplies.

Summary of features:

- Input voltage: 90 – 265 V_{AC}
- Output voltage: 19 V_{DC}
- Output current max.: 2.10 A
- Efficiency: ~90.5% (at 230 V_{AC}, 100% load)
- Efficiency: ~88.6% (at 90 V_{AC}, 100% load)



Copyright © Infineon Technologies AG 2018. All rights reserved.

General description

Schematic

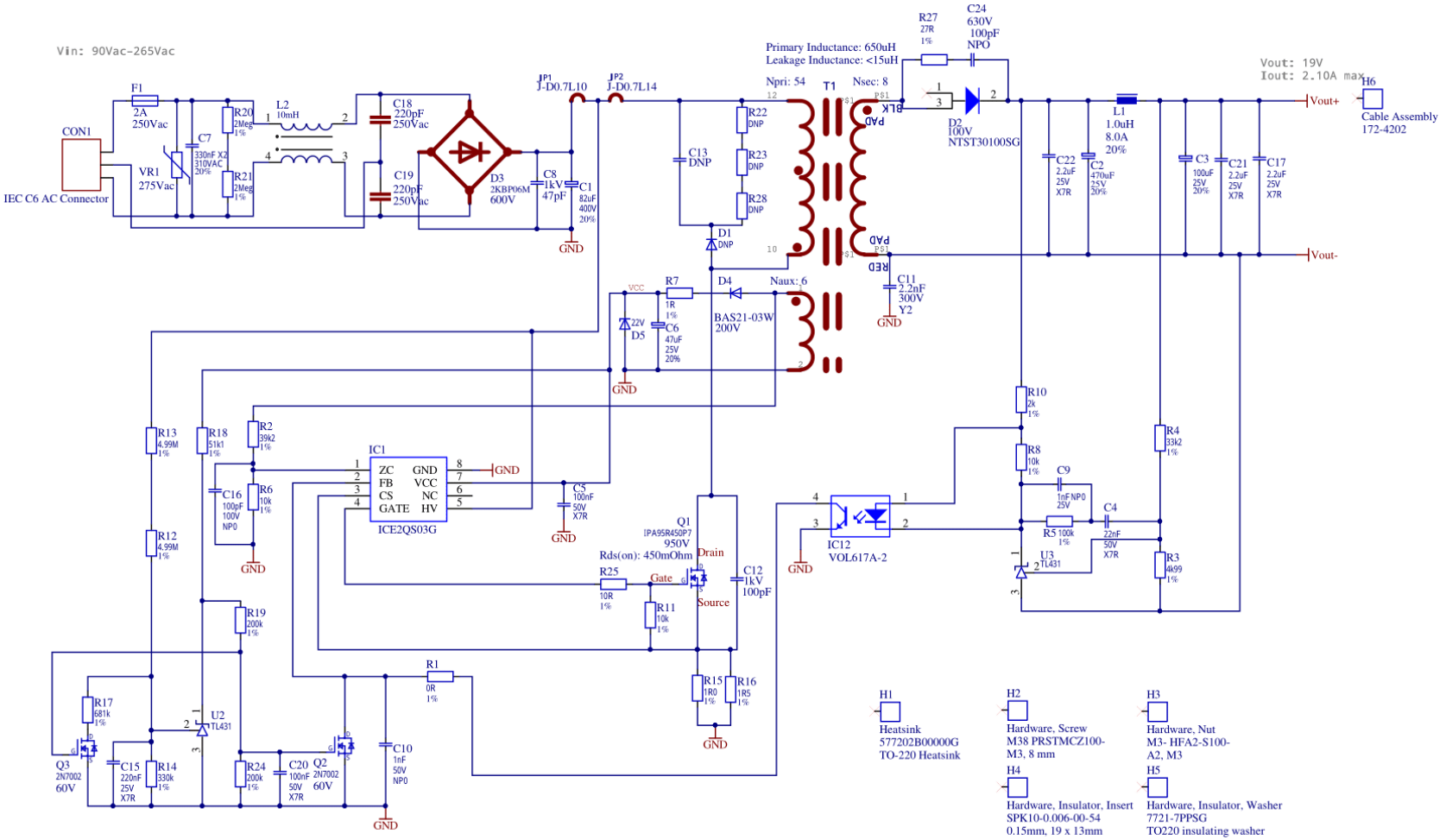

Copyright © Infineon Technologies AG 2018. All rights reserved.

Table of contents

1 General description

2 Efficiency results

3 PCB layout

4 Evaluation board features

Copyright © Infineon Technologies AG 2018. All rights reserved.

Efficiency results

Absolute efficiency of the 40 W adapter at 230 V_{AC}

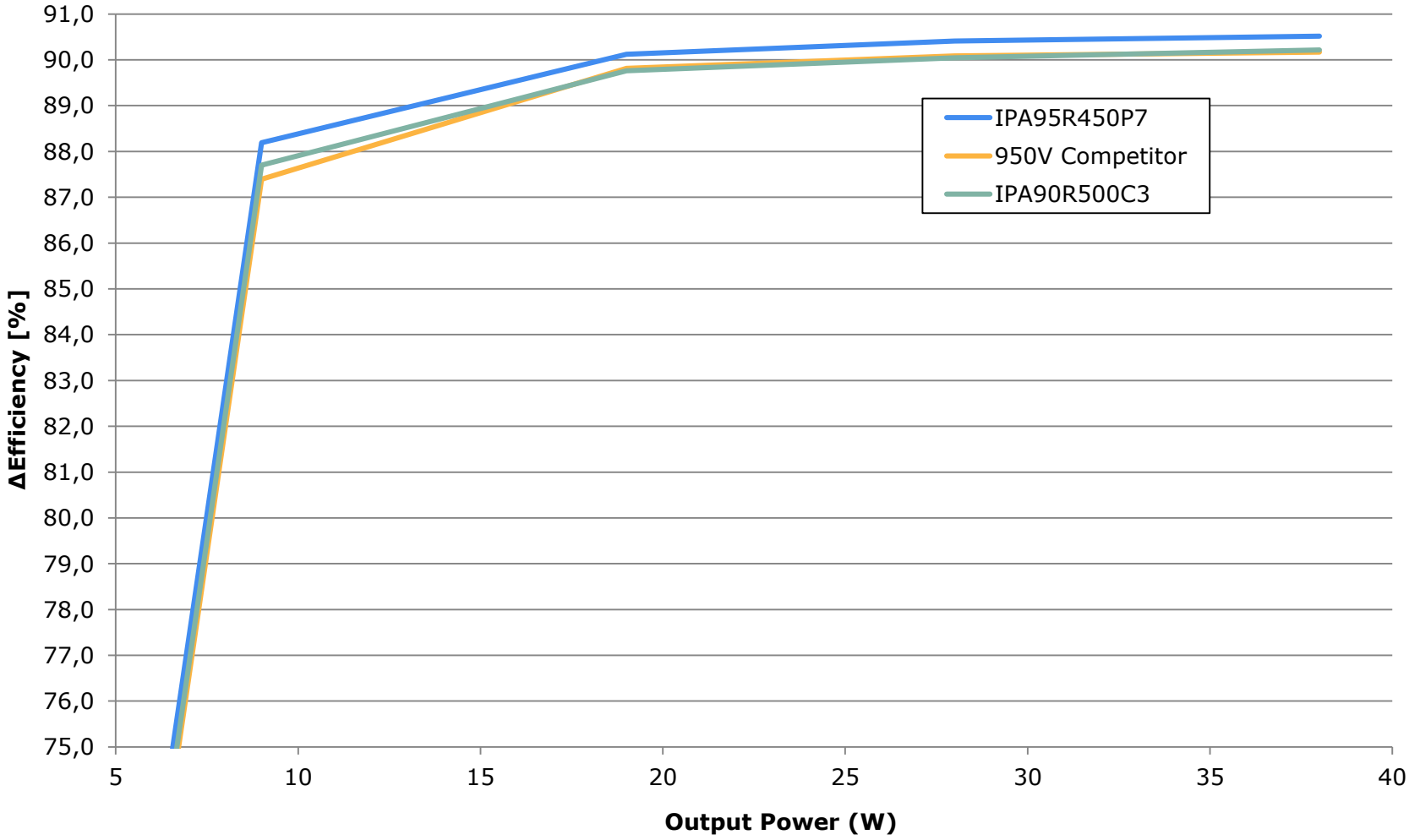

Copyright © Infineon Technologies AG 2018. All rights reserved.

Efficiency results

Absolute efficiency of the 40 W adapter at 90 V_{AC}

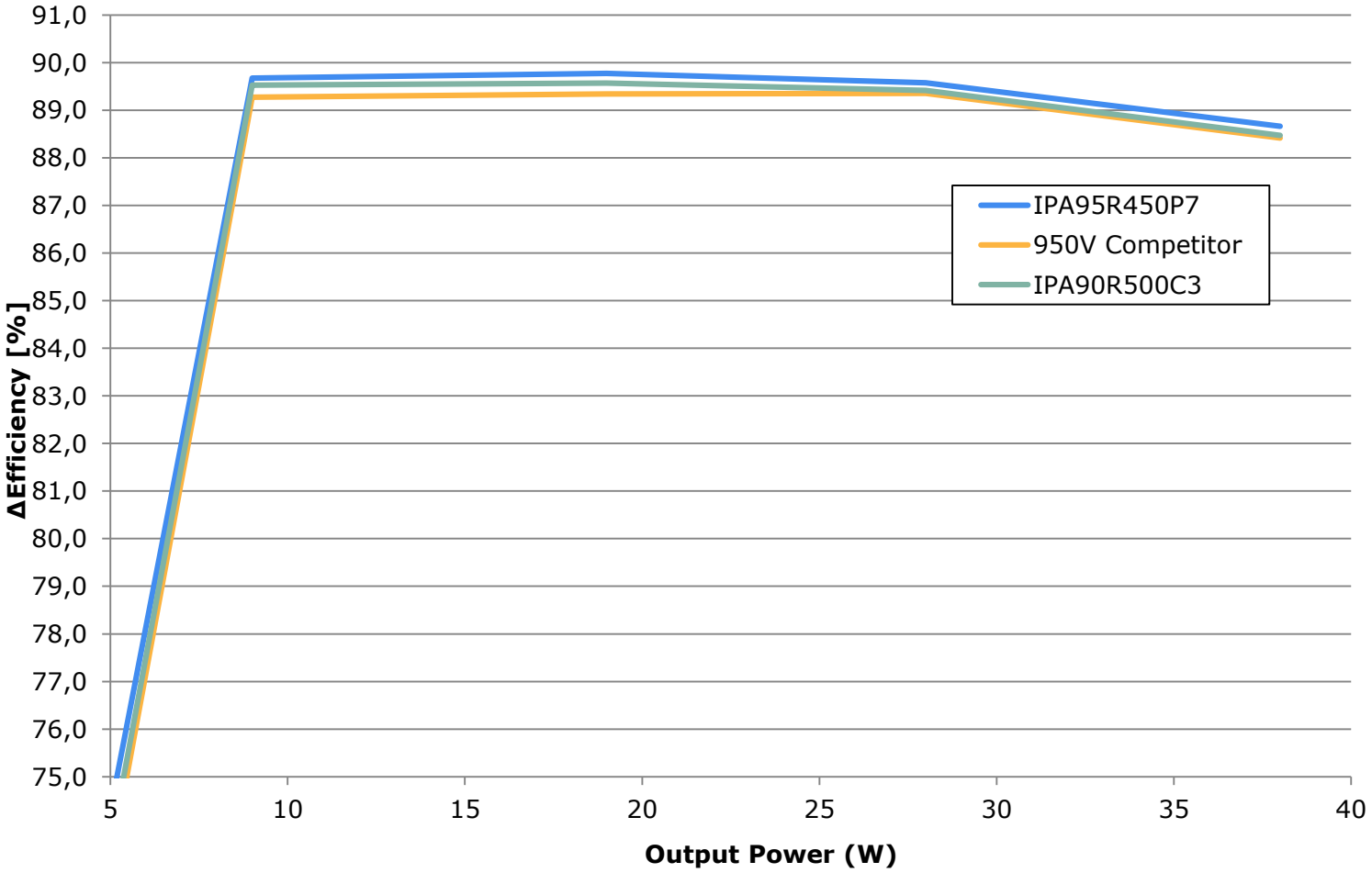

Copyright © Infineon Technologies AG 2018. All rights reserved.

Efficiency results

Efficiency graph of the 40 W adapter at 230 VAC showing the C3 and competitor's devices referenced to the P7 MOSFET.

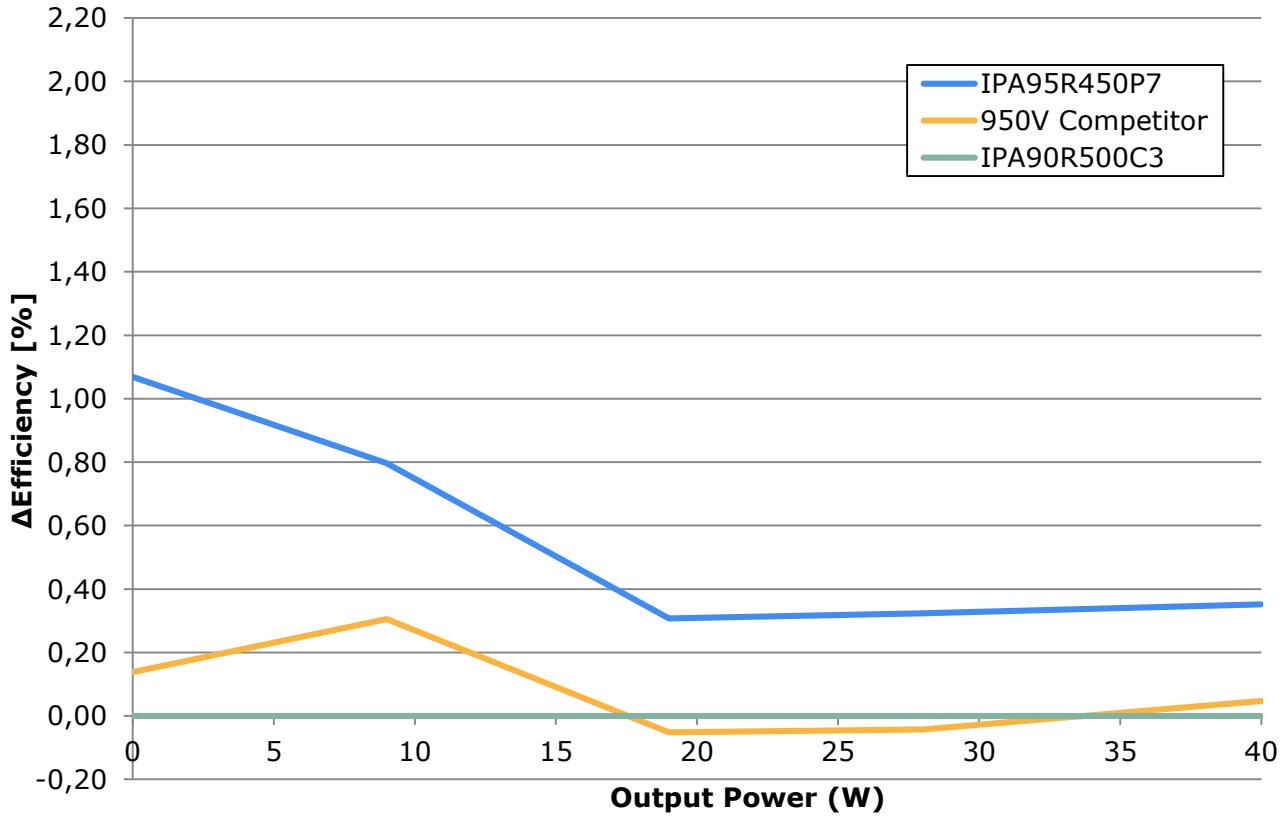

Copyright © Infineon Technologies AG 2018. All rights reserved.

Efficiency results

Efficiency of the 40 W adapter at 90 V_{AC} showing the C3 and competitor's devices referenced to the P7 MOSFET.

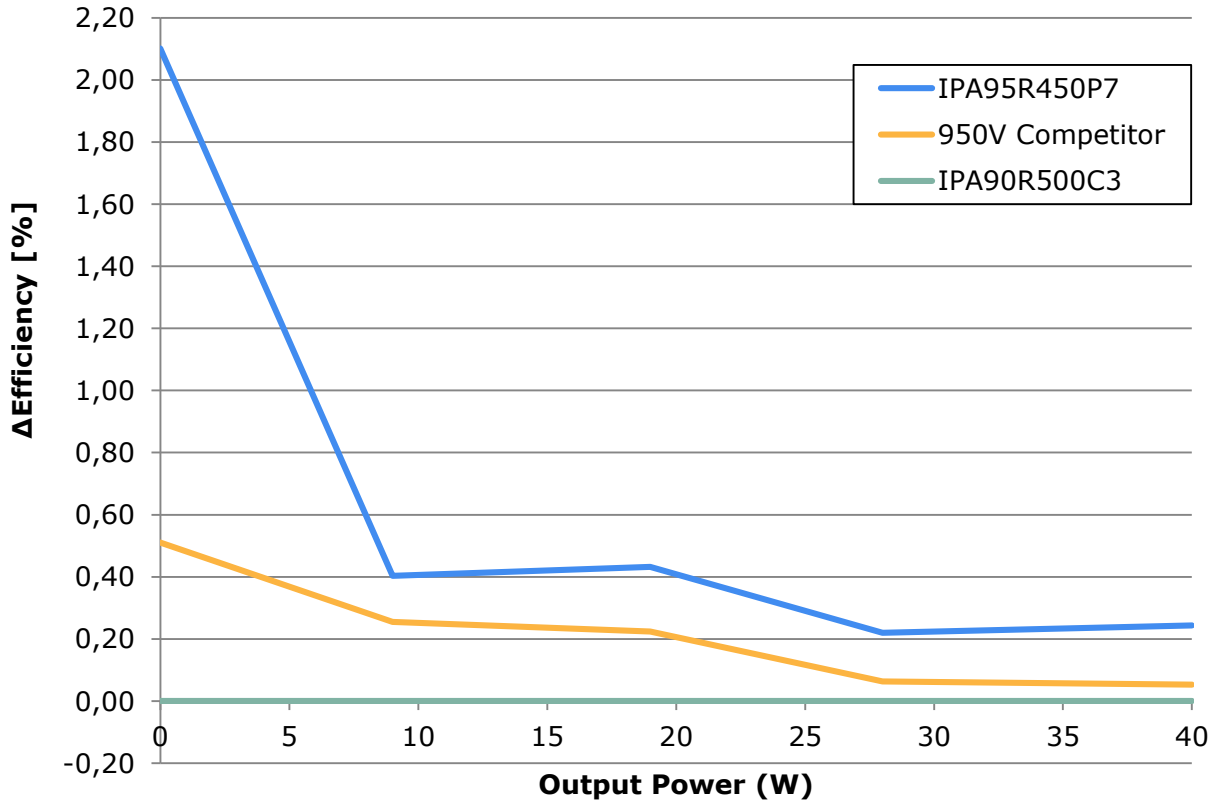

Copyright © Infineon Technologies AG 2018. All rights reserved.

Table of contents

1 General description

2 Efficiency results

3 PCB layout

4 Evaluation board features

Copyright © Infineon Technologies AG 2018. All rights reserved.

PCB layout

Board layout top

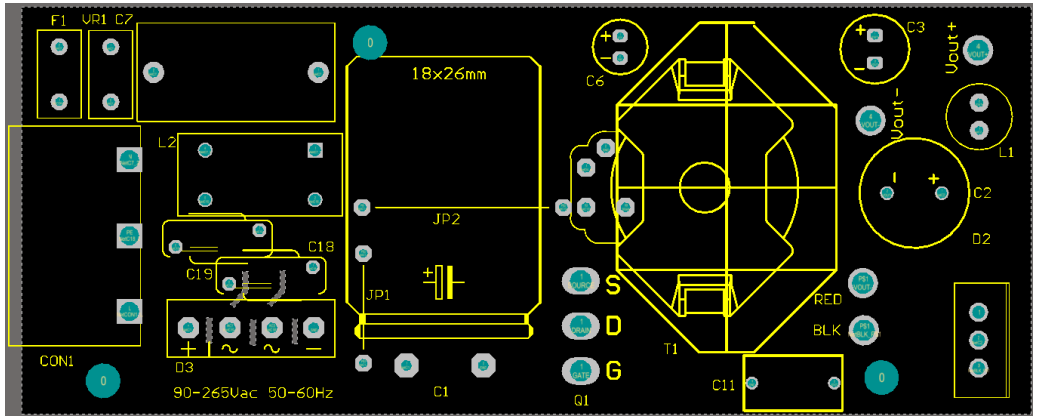

Board layout bottom

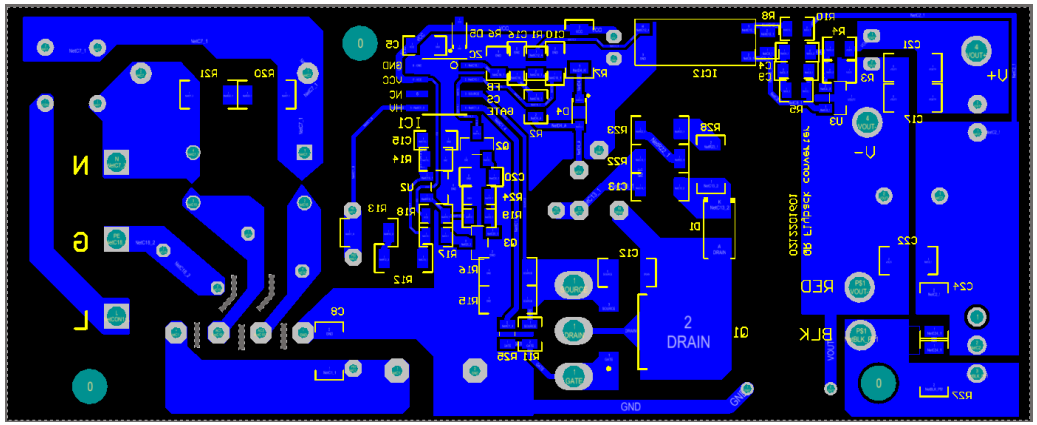

Copyright © Infineon Technologies AG 2018. All rights reserved.

Table of contents

1 General description

2 Efficiency results

3 PCB layout

4 Evaluation board features

Copyright © Infineon Technologies AG 2018. All rights reserved.

Evaluation board features

- **Fold back point protection** - For a QR flyback converter, the maximum possible output power is increased when a constant current limit value is used across the entire mains input voltage range. This is usually not desired as this will increase the cost of the transformer and output diode in the case of output over power conditions. The internal fold back protection is implemented to adjust the V_{CS} voltage limit according to the bus voltage. Here, the input line voltage is sensed using the current flowing out of the ZC pin, during the MOSFET on-time. As the result, the maximum current limit adjusts with the AC line voltage.
- **V_{CC} over voltage and under voltage protection** - During normal operation, the V_{cc} voltage is continuously monitored. When the V_{cc} voltage increases to VVCC OVP or V_{cc} voltage falls below the under voltage lock out level VVCC off, the IC will enter into auto restart mode.
- **Over load/open loop protection** - In the case of an open control loop, the feedback voltage is pulled up with an internal block. After a fixed blanking time, the IC enters into auto restart mode. In case of a secondary short-circuit or overload, the regulation voltage V_{FB} will also be pulled up, the same protection is applied and the IC will auto restart.
- **Adjustable output overvoltage protection** - During the off-time of the power switch, the voltage at the zero-crossing pin, ZC, is monitored for output overvoltage detection. If the voltage is higher than the preset threshold 3.7 V for a preset period of 100 µs, the IC is latched off.
- **Auto restart for over temperature protection** - The IC has a built-in over temperature protection function. When the controller's temperature reaches 140 °C, the IC will shut down the switch and enters into auto restart. This can protect the power MOSFET from overheating.
- **Short winding protection** - The source current of the MOSFET is sensed via external resistors, R15 and R16. If the voltage at the current sensing pin is higher than the preset threshold VCSSW of 1.68 V during the on-time of the power switch, the IC is latched off. This constitutes a short winding protection. To avoid an accidental latch off, a spike blanking time of 190 ns is integrated in the output of internal comparator.

Copyright © Infineon Technologies AG 2018. All rights reserved.

Support

Technical Material	› Application Notes › Simulation Models › Datasheets › PCB Design Data	› EVAL_40W_FLY_P7_950V › IPA95R450P7 › ICE2QS03G › 2N7002
Evaluation Boards	› Evaluation Boards › Demoboards › Reference Designs	› www.infineon.com/evaluationboards
Videos	› Technical Videos › Product Information Videos	› www.infineon.com/mediacenter

Copyright © Infineon Technologies AG 2018. All rights reserved.

Support
Online tools and services

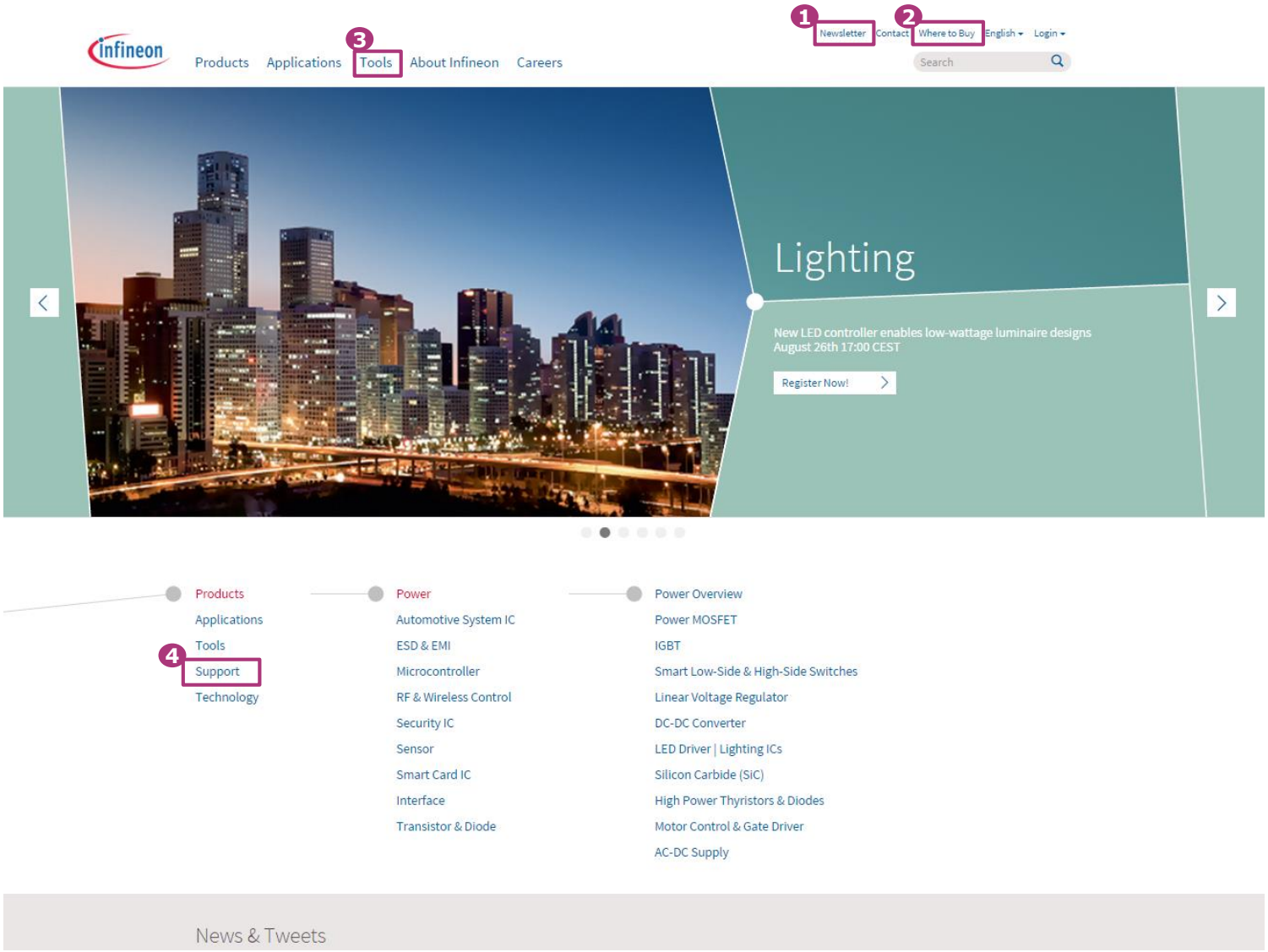

1. **Subscribe to Newsletter**
2. **Where to Buy**
3. **Tools, Finders and Selectors**
4. **Support**

Copyright © Infineon Technologies AG 2018. All rights reserved.



Part of your life. Part of tomorrow.

Infineon